built on C FRAME

Triple-Width 237

BARCELONA

NATURAL WALNUT, WHITE

Clean, cutting-edge design with bevelled edges and precision miter joints.

BARCELONA

NATURAL WALNUT / WHITE

Gloss White Doors

Brown Speaker Grill
(Models 329, 236, 336 & 339)

Mitered Edges

See Models & Dimensions on pages 26-31

217
Audio Cabinet
Subwoofer Enclosure

317
Audio Cabinet
Pro Audio Rack

517
Audio Cabinet
Pro Audio Rack

617
Audio Cabinet
Pro Audio Rack

221
AV Cabinet
Corner Cabinet

323
AV Cabinet
Pro Audio Rack
Corner Cabinet

329 - Speaker Integration
AV Cabinet
Corner Cabinet

236 - Speaker Integration
AV Cabinet

237
AV Cabinet

337
AV Cabinet

336 - Speaker Integration
AV Cabinet

339 - Speaker Integration
AV Cabinet

247
AV Cabinet

347
AV Cabinet

245 - Speaker Integration
AV Cabinet

345 - Speaker Integration
AV Cabinet

*Recommended TV Size

CHAMELEON
AV CABINETS

A - **Single-Width Compartment**
19.75”W x 19.5”D x 17.75”H

A1 - **Subwoofer Compartment**
19.75”W x 19.5”D x 17.75”H

B - **Single-Width Compartment**
19.75”W x 19.5”D x 27.75”H

C - **Media Drawer**
18.625”W x 18”D x 7.75”H
holds 75 DVD’s and or 111 CD’s

D - **Single-Width Center Speaker / Multi-Functional Compartment**
19.75”W x 19.5”D x 9”H

G - **Double-Width Center Speaker / Multi-Functional Compartment**
40.5”W x 19.5”D x 9”H

F - **Triple-Width Center Speaker / Multi-Functional Compartment**
61.25”W x 19.5”D x 9”H

H - **Double-Width Center Speaker / Multi-Functional Compartment**
40.5”W x 19.5”D x 8.15”H

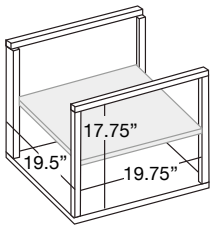

A

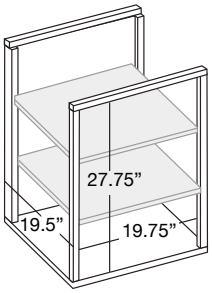

B

AUDIO CABINETS

217

317

517

617

AUDIO VIDEO CABINETS

221
*TV Size: up to 50”

323
*TV Size: up to 50”

237
*TV Size: up to 75”

337
*TV Size: up to 75”

247
*TV Size: up to 90”

347
*TV Size: up to 90”

SPEAKER INTEGRATED AV CABINETS – Includes Speaker Grill

329
*TV Size: up to 50”

236
*TV Size: up to 75”

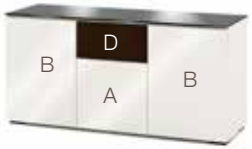

336
*TV Size: up to 75”

339
*TV Size: up to 75”

217
SUBWOOFER ENCLOSURE

245
*TV Size: up to 90”

345
*TV Size: up to 90”

CHAMELEON

CORNER AV CABINETS

Accommodating smaller spaces, our Corner Cabinets open up possibilities in a variety of living spaces. Corner Units available in three configurations and all Chameleon Styles.

C FRAME

221 CORNER
Rec. TV Size: up to 50”

323 CORNER
Rec. TV Size: up to 50”

329 CORNER
Rec. TV Size: up to 50”
Includes Speaker Grill

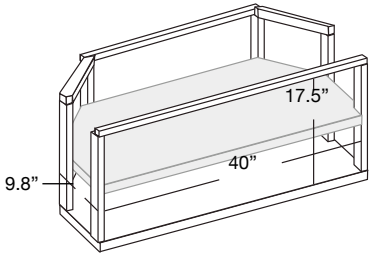

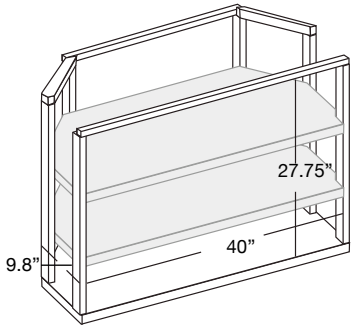

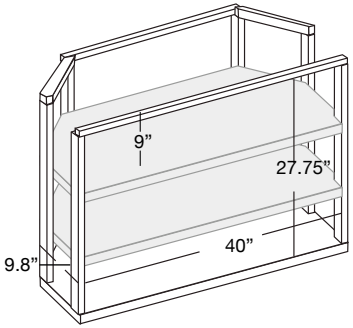

*CORNER INTERIOR

- 40” wide x 10” deep
- 32” wide x 14” deep
- 19” wide x 20” deep

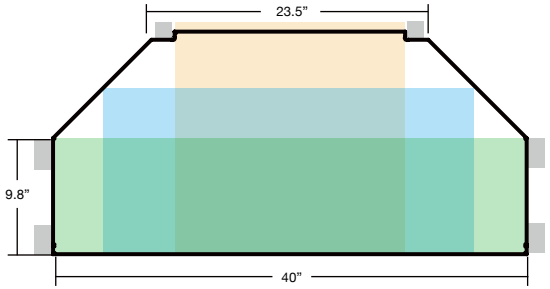

*CORNER EXTERIOR

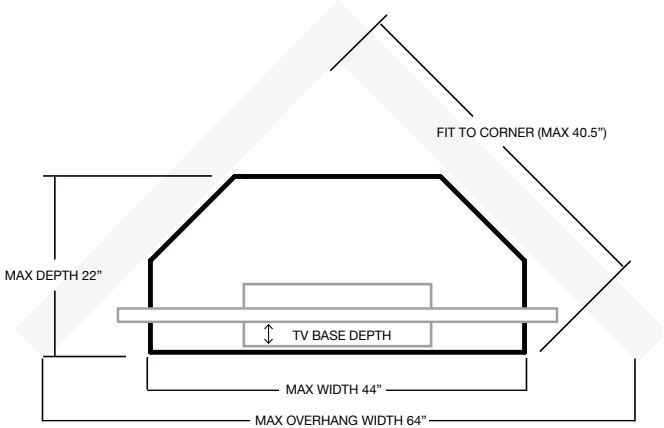

TV SIZING:
For every 1” of depth required by the TV base, subtract 1.8 from 64. This is the MAX TV width at the required depth. Note: Minor gains can be had by moving cabinet forward. This will cause a gap but will produce 1.8” in width per inch moved forward.

CHAMELEON

LOW PROFILE AV CABINETS

Simple installation. Affix to wall with toggle bolts.

Interior Dimensions

- **A3** 19.75”W x 11”D x 17.75”H
- **B3** 19.75”W x 11”D x 27.75”H
- **G3** 40.5”W x 11”D x 9”H

Low Profile 337
64.75”W x 31.375”H x 12”D

Low Profile 347
88”W x 31.375”H x 12”D

Low Profile 345
88”W x 31.375”H x 12”D
Speaker Compartment: 40”W x 11”D x 9”H

Low Profile 337 With TV Mount
64.75”W x 31.375”H x 12”D
Holds 50-70” TV’s, 175 lbs (80kg)

Low Profile 347 With TV Mount
85.5”W x 31.375”H x 12”D
Holds 50-103” TV’s, 175 lbs (80kg)

Low Profile 345 with TV Mount
85.5”W x 31.375”H x 12”D
Holds 50-103” TV’s, 175 lbs (80kg)
Speaker Compartment: 40”W x 11”D x 9”H

	BARCELONA WHITE	BARCELONA BLACK GLASS	BERLIN	CHICAGO	CORSICA	DENVER NATURAL OAK	DENVER NATURAL WALNUT	ELBA
LOW PROFILE CABINETS - See interior dimensions on page 23.								
337 Low-Profile Cabinet			**C1/BL337/WE** 64.75"W x 31.375"H x 12"D	**C1/CH337/BO** 64.75"W x 31.375"H x 12"D		**C1/DV337/NO** 64.75"W x 31.375"H x 12"D	**C1/DV337/MW** 64.75"W x 31.375"H x 12"D	
337 Low-Profile Cabinet with TV Mount			**C1/BL337M/WE** 64.75"W x 31.375"H x 12"D	**C1/CH337M/BO** 64.75"W x 31.375"H x 12"D		**C1/DV337M/NO** 64.75"W x 31.375"H x 12"D	**C1/DV337M/MW** 64.75"W x 31.375"H x 12"D	
345 Low-Profile, Wall Cabinet			**C1/BL345/WE** 85.5"W x 31.375"H x 12"D	**C1/CH345/BO** 85.5"W x 31.375"H x 12"D		**C1/DV345/NO** 85.5"W x 31.375"H x 12"D	**C1/DV345/MW** 85.5"W x 31.375"H x 12"D	
345 Low-Profile Cabinet with TV Mount			**C1/BL345M/WE** 85.5"W x 31.375"H x 12"D	**C1/CH345M/BO** 85.5"W x 31.375"H x 12"D		**C1/DV345M/NO** 85.5"W x 31.375"H x 12"D	**C1/DV345M/MW** 85.5"W x 31.375"H x 12"D	
347 Low-Profile Cabinet			**C1/BL347/WE** 85.5"W x 31.375"H x 12"D	**C1/CH347/BO** 85.5"W x 31.375"H x 12"D		**C1/DV347/NO** 85.5"W x 31.375"H x 12"D	**C1/DV347/MW** 85.5"W x 31.375"H x 12"D	
347 Low-Profile Cabinet with TV Mount			**C1/BL347M/WE** 85.5"W x 31.375"H x 12"D	**C1/CH347M/BO** 85.5"W x 31.375"H x 12"D		**C1/DV347M/NO** 85.5"W x 31.375"H x 12"D	**C1/DV347M/MW** 85.5"W x 31.375"H x 12"D	
AUDIO & AV CABINET - See interior dimensions on page 17.								
217 Audio Cabinet	**C/BA217/NW/GW** 24.25"W x 24.75"H x 22"D	**C/BA217/NW/BG** 24.25"W x 24.75"H x 22"D	**C/BL217/WE** 23.25"W x 21.5"H x 21.25"D	**C/CH217/BO** 25.75"W x 22.5"H x 21.25"D	**C/CO217/AC** 23.25"W x 21.5"H x 21.25"D	**C/DV217/NO** 23.25"W x 21.5"H x 21.25"D	**C/DV217/MW** 23.25"W x 21.5"H x 21.25"D	**C/EL217/AC** 23.25"W x 24.5"H x 21.25"D
317 Audio Cabinet	**C/BA317/NW/GW** 24.25"W x 34.5"H x 22"D	**C/BA317/NW/BG** 24.25"W x 34.5"H x 22"D	**C/BL317/WE** 23.25"W x 31.25"H x 21.25"D	**C/CH317/BO** 25.75"W x 32"H x 21.25"D	**C/CO317/AC** 23.25"W x 31.25"H x 21.25"D	**C/DV317/NO** 23.25"W x 31.25"H x 21.25"D	**C/DV317/MW** 23.25"W x 31.25"H x 21.25"D	
517 Audio Cabinet	**C/BA517/NW/GW** 24.25"W x 54.75"H x 22"D	**C/BA517/NW/BG** 24.25"W x 54.75"H x 22"D	**C/BL517/WE** 23.25"W x 50.875"H x 21.25"D	**C/CH517/BO** 25.75"W x 50.875"H x 21.25"D	**C/CO517/AC** 23.25"W x 50.875"H x 21.25"D	**C/DV517/NO** 23.25"W x 50.875"H x 21.25"D	**C/DV517/MW** 23.25"W x 50.875"H x 21.25"D	**C/EL517/AC** 23.25"W x 53.625"H x 21.25"D
617 Audio Cabinet	**C/BA617/NW/GW** 24.25"W x 64.5"H x 22"D	**C/BA617/NW/BG** 24.25"W x 64.5"H x 22"D	**C/BL617/WE** 23.25"W x 60.625"H x 21.25"D	**C/CH617/BO** 25.75"W x 60.625"H x 21.25"D	**C/CO617/AC** 23.25"W x 60.625"H x 21.25"D	**C/DV617/NO** 23.25"W x 60.625"H x 21.25"D	**C/DV617/MW** 23.25"W x 60.625"H x 21.25"D	**C/EL617/AC** 23.25"W x 63.25"H x 21.25"D
221 AV Cabinet	**C/BA221/NW/GW** 45"W x 24.75"H x 22"D	**C/BA221/NW/BG** 45"W x 24.75"H x 22"D	**C/BL221/WE** 44"W x 21.5"H x 21.25"D	**C/CH221/BO** 46.5"W x 22.5"H x 21.25"D	**C/CO221/AC** 44"W x 21.5"H x 21.25"D	**C/DV221/NO** 44"W x 21.5"H x 21.25"D	**C/DV221/MW** 44"W x 21.5"H x 21.25"D	**C/EL221/AC** 44"W x 24.5"H x 21.25"D
323 AV Cabinet	**C/BA323/NW/GW** 45"W x 34.5"H x 22"D	**C/BA323/NW/BG** 45"W x 34.5"H x 22"D	**C/BL323/WE** 44"W x 31.375"H x 21.25"D	**C/CH323/BO** 44"W x 31.375"H x 21.25"D	**C/CO323/AC** 44"W x 31.25"H x 21.25"D	**C/DV323/NO** 44"W x 31.375"H x 21.25"D	**C/DV323/MW** 44"W x 31.375"H x 21.25"D	**C/EL323/AC** 44"W x 33.75"H x 21.25"D
237 AV Cabinet	**C/BA237/NW/GW** 65.75"W x 24.75"H x 22"D	**C/BA237/NW/BG** 65.75"W x 24.75"H x 22"D	**C/BL237/WE** 64.75"W x 21.5"H x 21.25"D	**C/CH237/BO** 67.25"W x 22.5"H x 21.25"D	**C/CO237/AC** 64.75"W x 21.5"H x 21.25"D	**C/DV237/NO** 64.75"W x 21.5"H x 21.25"D	**C/DV237/MW** 64.75"W x 21.5"H x 21.25"D	**C/EL237/AC** 64.75"W x 24.5"H x 21.25"D
247 AV Cabinet	**C/BA247/NW/GW** 86.5"W x 24.75"H x 22"D	**C/BA247/NW/BG** 85.5"W x 24.75"H x 22"D	**C/BL247/WE** 85.5"W x 21.5"H x 21.25"D	**C/CH247/BO** 88"W x 22.5"H x 21.25"D	**C/CO247/AC** 85.5"W x 21.5"H x 21.25"D	**C/DV247/NO** 85.5"W x 21.5"H x 21.25"D	**C/DV247/MW** 85.5"W x 21.5"H x 21.25"D	**C/EL247/AC** 85.5"W x 24.5"H x 21.25"D
337 AV Cabinet	**C/BA337/NW/GW** 65.75"W x 34.5"H x 22"D	**C/BA337/NW/BG** 65.75"W x 34.5"H x 22"D	**C/BL337/WE** 64.75"W x 31.375"H x 21.25"D	**C/CH337/BO** 67.25"W x 32"H x 21.25"D	**C/CO337/AC** 64.75"W x 31.375"H x 21.25"D	**C/DV337/NO** 64.75"W x 31.375"H x 21.25"D	**C/DV337/MW** 64.75"W x 31.375"H x 21.25"D	**C/EL337/AC** 64.75"W x 33.75"H x 21.25"D
347 AV Cabinet	**C/BA347/NW/GW** 86.5"W x 34.5"H x 22"D	**C/BA347/NW/BG** 85.5"W x 34.5"H x 22"D	**C/BL347/WE** 85.5"W x 31.375"H x 21.25"D	**C/CH347/BO** 88"W x 32"H x 21.25"D	**C/CO347/AC** 85.5"W x 31.375"H x 21.25"D	**C/DV347/NO** 85.5"W x 31.375"H x 21.25"D	**C/DV347/MW** 85.5"W x 31.375"H x 21.25"D	**C/EL347/AC** 85.5"W x 33.75"H x 21.25"D

HAMPTON	LANCASTER	MIAMI	MILAN	OLSO	SEATTLE	SONOMA	VENICE	ZURICH
	C1/LA337/BBO 64.75"W x 31.75"H x 12"D	**C1/MM337/GW/BK** 64.75"W x 31.375"H x 12"D		**C1/OS337/BG** 64.75"W x 31.375"H x 12"D	**C1/SE337/GO** 64.75"W x 31.375"H x 12"D			**C1/ZU337/OB** 64.75"W x 31.375"H x 12"D
	C1/LA337M/BBO 64.75"W x 31.75"H x 12"D	**C1/MM337M/GW/BK** 64.75"W x 31.375"H x 12"D		**C1/OS337M/BG** 64.75"W x 31.375"H x 12"D	**C1/SE337M/GO** 64.75"W x 31.375"H x 12"D			**C1/ZU337M/OB** 64.75"W x 31.375"H x 12"D
	C1/LA345/BBO 85.5"W x 31.75"H x 12"D	**C1/MM345/GW/BK** 85.5"W x 31.375"H x 12"D		**C1/OS345/BG** 85.5"W x 31.375"H x 12"D	**C1/SE345/GO** 85.5"W x 31.375"H x 12"D			**C1/ZU345/OB** 85.5"W x 31.375"H x 12"D
	C1/LA345M/BBO 85.5"W x 31.75"H x 12"D	**C1/MM345M/GW/BK** 85.5"W x 31.375"H x 12"D		**C1/OS345M/BG** 85.5"W x 31.375"H x 12"D	**C1/SE345M/GO** 85.5"W x 31.375"H x 12"D			**C1/ZU345M/OB** 85.5"W x 31.375"H x 12"D
	C1/LA347/BBO 85.5"W x 31.75"H x 12"D	**C1/MM347/GW/BK** 85.5"W x 31.375"H x 12"D		**C1/OS347/BG** 85.5"W x 31.375"H x 12"D	**C1/SE347/GO** 85.5"W x 31.375"H x 12"D			**C1/ZU347/OB** 85.5"W x 31.375"H x 12"D
	C1/LA347M/BBO 85.5"W x 31.75"H x 12"D	**C1/MM347M/GW/BK** 85.5"W x 31.375"H x 12"D		**C1/OS347M/BG** 85.5"W x 31.375"H x 12"D	**C1/SE347M/GO** 85.5"W x 31.375"H x 12"D			**C1/ZU347M/OB** 85.5"W x 31.375"H x 12"D
	C/LA217/BBO 23.25"W x 21.75"H x 21.25"D	**C/MM217/GW/BK** 23.25"W x 21.5"H x 21.25"D	**C/ML217/WH/BK** 23.25"W x 21.5"H x 21.25"D	**C/OS217/BG** 23.25"W x 21.5"H x 21.25"D	**C/SE217/GO** 23.25"W x 21.5"H x 21.25"D	**C/SO217/AC** 23.25"W x 24.5"H x 21.25"D		**C/ZU217/OB** 23.25"W x 21.5"H x 21.25"D
	C/LA317/BBO 23.25"W x 31.75"H x 21.25"D	**C/MM317/GW/BK** 23.25"W x 31.25"H x 21.25"D	**C/ML317/WH/BK** 23.25"W x 31.25"H x 21.25"D	**C/OS317/BG** 23.25"W x 31.25"H x 21.25"D	**C/SE317/GO** 23.25"W x 31.25"H x 21.25"D	**C/SO317/AC** 23.25"W x 33.75"H x 21.25"D		**C/ZU317/OB** 23.25"W x 31.25"H x 21.25"D
	C/LA517/BBO 23.25"W x 51.25"H x 21.25"D	**C/MM517/GW/BK** 23.25"W x 50.875"H x 21.25"D	**C/ML517/WH/BK** 23.25"W x 50.875"H x 21.25"D	**C/OS517/BG** 23.25"W x 50.875"H x 21.25"D	**C/SE517/GO** 23.25"W x 50.875"H x 21.25"D	**C/SO517/AC** 23.25"W x 53.625"H x 21.25"D		**C/ZU517/OB** 23.25"W x 50.875"H x 21.25"D
	C/LA617/BBO 23.25"W x 61"H x 21.25"D	**C/MM617/GW/BK** 23.25"W x 60.625"H x 21.25"D	**C/ML617/WH/BK** 23.25"W x 60.625"H x 21.25"D	**C/OS617/BG** 23.25"W x 60.625"H x 21.25"D	**C/SE617/GO** 23.25"W x 60.625"H x 21.25"D	**C/SO617/AC** 23.25"W x 63.25"H x 21.25"D		**C/ZU617/OB** 23.25"W x 60.625"H x 21.25"D
C/HA221/DB 45.25"W x 24.5"H x 21.75"D	**C/LA221/BBO** 44"W x 21.75"H x 21.25"D	**C/MM221/GW/BK** 44"W x 21.5"H x 21.25"D	**C/ML221/WH/BK** 44"W x 21.5"H x 21.25"D	**C/OS221/BG** 44"W x 21.5"H x 21.25"D	**C/SE221/GO** 44"W x 21.5"H x 21.25"D	**C/SO221/AC** 44"W x 24.5"H x 21.25"D		**C/ZU221/OB** 44"W x 21.5"H x 21.25"D
	C/LA323/BBO 44"W x 31.75"H x 21.25"D	**C/MM323/GW/BK** 44"W x 31.375"H x 21.25"D	**C/ML323/WH/BK** 44"W x 31.375"H x 21.25"D	**C/OS323/BG** 44"W x 31.375"H x 21.25"D	**C/SE323/GO** 44"W x 31.375"H x 21.25"D	**C/SO323/AC** 44"W x 33.75"H x 21.25"D		**C/ZU323/OB** 44"W x 31.375"H x 21.25"D
C/HA237/DB 66"W x 24.5"H x 21.75"D	**C/LA237/BBO** 64.75"W x 21.75"H x 21.25"D	**C/MM237/GW/BK** 64.75"W x 21.5"H x 21.25"D	**C/ML237/WH/BK** 64.75"W x 21.5"H x 21.25"D	**C/OS237/BG** 64.75"W x 21.5"H x 21.25"D	**C/SE237/GO** 64.75"W x 21.5"H x 21.25"D	**C/SO237/AC** 64.75"W x 24.5"H x 21.25"D		**C/ZU237/OB** 64.75"W x 21.5"H x 21.25"D
	C/LA247/BBO 85.5"W x 21.88"H x 21.25"D	**C/MM247/GW/BK** 85.5"W x 21.5"H x 21.25"D	**C/ML247/WH/BK** 85.5"W x 21.5"H x 21.25"D	**C/OS247/BG** 85.5"W x 21.5"H x 21.25"D	**C/SE247/GO** 85.5"W x 21.5"H x 21.25"D	**C/SO247/AC** 85.5"W x 24.5"H x 21.25"D		**C/ZU247/OB** 85.5"W x 21.5"H x 21.25"D
	C/LA337/BBO 64.75"W x 31.75"H x 21.25"D	**C/MM337/GW/BK** 64.75"W x 31.375"H x 21.25"D	**C/ML337/WH/BK** 64.75"W x 31.375"H x 21.25"D	**C/OS337/BG** 64.75"W x 31.375"H x 21.25"D	**C/SE337/GO** 64.75"W x 31.375"H x 21.25"D	**C/SO337/AC** 64.75"W x 33.75"H x 21.25"D		**C/ZU337/OB** 64.75"W x 31.375"H x 21.25"D
	C/LA347/BBO 85.5"W x 31.75"H x 21.25"D	**C/MM347/GW/BK** 85.5"W x 31.375"H x 21.25"D	**C/ML347/WH/BK** 85.5"W x 31.375"H x 21.25"D	**C/OS347/BG** 85.5"W x 31.375"H x 21.25"D	**C/SE347/GO** 85.5"W x 31.375"H x 21.25"D	**C/SO347/AC** 85.5"W x 33.75"H x 21.25"D		**C/ZU347/OB** 85.5"W x 31.375"H x 21.25"D

	BARCELONA WHITE	BARCELONA BLACK GLASS	BERLIN	CHICAGO	CORSICA	DENVER NATURAL OAK	DENVER NATURAL WALNUT	ELBA
SPEAKER INTEGRATED AV CABINETS - See interior dimensions on page 17.								
217 Subwoofer Enclosure	**C/BA217SE/NW/GW** 24.25"W x 24.25"H x 21.25"D	**C/BA217SE/NW/BG** 24.25"W x 24.25"H x 21.25"D	**C/BL217SE/WE** 23.25"W x 21.5"H x 21.25"D	**C/CH217SE/BO** 23.25"W x 21.5"H x 21.25"D	**C/CO217SE/AC** 25.75"W x 22.5"H x 21.25"D	**C/DV217SE/NO** 23.25"W x 21.5"H x 21.25"D	**C/DV217SE/MW** 23.25"W x 21.5"H x 21.25"D	**C/EL217SE/AC** 23.25"W x 24.5"H x 21.25"D
236 AV Cabinet	**C/BA236/NW/GW** 65.75"W x 24.25"H x 21.25"D	**C/BA236/NW/BG** 65.75"W x 24.25"H x 21.25"D	**C/BL236/WE** 64.75"W x 21.5"H x 21.25"D	**C/CH236/BO** 64.75"W x 21.5"H x 21.25"D	**C/CO236/AC** 67.25"W x 22.5"H x 21.25"D	**C/DV236/NO** 64.75"W x 21.5"H x 21.25"D	**C/DV236/MW** 64.75"W x 21.5"H x 21.25"D	**C/EL236/AC** 64.75"W x 24.5"H x 21.25"D
245 AV Cabinet	**C/BA245/NW/GW** 86.5"W x 24.25"H x 21.25"D	**C/BA245/NW/BG** 86.5"W x 24.25"H x 21.25"D	**C/BL245/WE** 85.5"W x 21.5"H x 21.25"D	**C/CH245/BO** 85.5"W x 21.5"H x 21.25"D	**C/CO245/AC** 88"W x 22.5"H x 21.25"D	**C/DV245/NO** 85.5"W x 21.5"H x 21.25"D	**C/DV245/MW** 85.5"W x 21.5"H x 21.25"D	**C/EL245/AC** 85.5"W x 24.5"H x 21.25"D
329 AV Cabinet	**C/BA329/NW/GW** 45"W x 34.5"H x 21.25"D	**C/BA329/NW/BG** 45"W x 34.5"H x 21.25"D	**C/BL329/WE** 44"W x 31.25"H x 21.25"D	**C/CH329/BO** 44"W x 31.25"H x 21.25"D	**C/CO329/AC** 46.5"W x 32"H x 21.25"D	**C/DV329/NO** 44"W x 31.25"H x 21.25"D	**C/DV329/MW** 44"W x 31.25"H x 21.25"D	**C/EL329/AC** 44"W x 33.75"H x 21.25"D
336 AV Cabinet	**C/BA336/NW/GW** 65.75"W x 34.5"H x 21.25"D	**C/BA336/NW/BG** 65.75"W x 34.5"H x 21.25"D	**C/BL336/WE** 64.75"W x 31.25"H x 21.25"D	**C/CH336/BO** 64.75"W x 31.25"H x 21.25"D	**C/CO336/AC** 67.25"W x 32"H x 21.25"D	**C/DV336/NO** 64.75"W x 31.25"H x 21.25"D	**C/DV336/MW** 64.75"W x 31.25"H x 21.25"D	**C/EL336/AC** 64.75"W x 33.75"H x 21.25"D
339 AV Cabinet	**C/BA339/NW/GW** 65.75"W x 34.5"H x 21.25"D	**C/BA339/NW/BG** 65.75"W x 34.5"H x 21.25"D	**C/BL339/WE** 64.75"W x 31.25"H x 21.25"D	**C/CH339/BO** 64.75"W x 31.25"H x 21.25"D	**C/CO339/AC** 67.25"W x 32"H x 21.25"D	**C/DV339/NO** 64.75"W x 31.25"H x 21.25"D	**C/DV339/MW** 64.75"W x 31.25"H x 21.25"D	**C/EL339/AC** 64.75"W x 33.75"H x 21.25"D
345 AV Cabinet	**C/BA345/NW/GW** 86.5"W x 34.5"H x 21.25"D	**C/BA345/NW/BG** 86.5"W x 34.5"H x 21.25"D	**C/BL345/WE** 85.5"W x 31.25"H x 21.25"D	**C/CH345/BO** 85.5"W x 31.25"H x 21.25"D	**C/CO345/AC** 88"W x 32"H x 21.25"D	**C/DV345/NO** 85.5"W x 31.25"H x 21.25"D	**C/DV345/MW** 85.5"W x 31.25"H x 21.25"D	**C/EL345/AC** 85.5"W x 33.75"H x 21.25"D
CORNER & AV CABINETS - See interior dimensions on page 21.								
221 Corner AV Cabinet	**C/BA221CR/NW/GW** 45"W x 24.25"H x 21.25"D	**C/BA221CR/NW/BG** 45"W x 24.25"H x 21.25"D	**C/BL221CR/WE** 44"W x 21.5"H x 21.25"D	**C/CH221CR/BO** 44"W x 21.5"H x 21.25"D	**C/CO221CR/AC** 46.5"W x 22.5"H x 21.25"D	**C/DV221CR/NO** 44"W x 21.5"H x 21.25"D	**C/DV221CR/MW** 44"W x 21.5"H x 21.25"D	**C/EL221CR/AC** 44"W x 24.5"H x 21.25"D
323 Corner AV Cabinet	**C/BA323CR/NW/GW** 45"W x 34.5"H x 21.25"D	**C/BA323CR/NW/BG** 45"W x 34.5"H x 21.25"D	**C/BL323CR/WE** 44"W x 31.25"H x 21.25"D	**C/CH323CR/BO** 44"W x 31.25"H x 21.25"D	**C/CO323CR/AC** 46.5"W x 32"H x 21.25"D	**C/DV323CR/NO** 44"W x 31.25"H x 21.25"D	**C/DV323CR/MW** 44"W x 31.25"H x 21.25"D	**C/EL323CR/AC** 44"W x 33.75"H x 21.25"D
329 Corner AV Cabinet	**C/BA329CR/NW/GW** 45"W x 34.5"H x 21.25"D	**C/BA329CR/NW/BG** 45"W x 34.5"H x 21.25"D	**C/BL329CR/WE** 44"W x 31.25"H x 21.25"D	**C/CH329CR/BO** 44"W x 31.25"H x 21.25"D	**C/CO329CR/AC** 46.5"W x 31.25"H x 21.25"D	**C/DV329CR/NO** 44"W x 31.25"H x 21.25"D	**C/DV329CR/MW** 44"W x 31.25"H x 21.25"D	**C/EL329CR/AC** 44"W x 33.75"H x 21.25"D
PRO AUDIO RACK - See interior dimensions on page 20.								
317 Pro Audio Rack	**C/BA317RM/NW/GW** 24.25"W x 34.5"H x 21.25"D	**C/BA317RM/NW/BG** 24.25"W x 34.5"H x 21.25"D	**C/BL317RM/WE** 23.25"W x 31.25"H x 21.25"D	**C/CH317RM/BO** 23.25"W x 31.25"H x 21.25"D	**C/CO317RM/AC** 25.75"W x 32"H x 21.25"D	**C/DV317RM/NO** 23.25"W x 31.25"H x 21.25"D	**C/DV317RM/MW** 23.25"W x 31.25"H x 21.25"D	**C/EL317RM/AC** 23.25"W x 33.75"H x 21.25"D
323 Pro Audio Rack	**C/BA323RM/NW/GW** 45"W x 34.5"H x 21.25"D	**C/BA323RM/NW/BG** 45"W x 34.5"H x 21.25"D	**C/BL323RM/WE** 44"W x 31.25"H x 21.25"D	**C/CH323RM/BO** 44"W x 31.25"H x 21.25"D	**C/CO323RM/AC** 46.5"W x 32"H x 21.25"D	**C/DV323RM/NO** 44"W x 31.25"H x 21.25"D	**C/DV323RM/MW** 44"W x 31.25"H x 21.25"D	**C/EL323RM/AC** 44"W x 33.75"H x 21.25"D
517 Pro Audio Rack	**C/BA517RM/NW/GW** 24.25"W x 54.5"H x 21.25"D	**C/BA517RM/NW/BG** 24.25"W x 54.5"H x 21.25"D	**C/BL517RM/WE** 23.25"W x 50.875"H x 21.25"D	**C/CH517RM/BO** 23.25"W x 50.875"H x 21.25"D	**C/CO517RM/AC** 25.75"W x 51.75"H x 21.25"D	**C/DV517RM/NO** 23.25"W x 50.875"H x 21.25"D	**C/DV517RM/MW** 23.25"W x 50.875"H x 21.25"D	**C/EL517RM/AC** 23.25"W x 53.625"H x 21.25"D
617 Pro Audio Rack	**C/BA617RM/NW/GW** 24.25"W x 64.5"H x 21.25"D	**C/BA617RM/NW/BG** 24.25"W x 64.5"H x 21.25"D	**C/BL617RM/WE** 23.25"W x 60.625"H x 21.25"D	**C/CH617RM/BO** 23.25"W x 60.625"H x 21.25"D	**C/CO617RM/AC** 25.75"W x 61.25"H x 21.25"D	**C/DV617RM/NO** 23.25"W x 60.625"H x 21.25"D	**C/DV617RM/MW** 23.25"W x 60.625"H x 21.25"D	**C/EL617RM/AC** 23.25"W x 63.25"H x 21.25"D

HAMPTON	LANCASTER	MIAMI	MILAN	OLSO	SEATTLE	SONOMA	VENICE	ZURICH
	C/LA217SE/BBO 23.25"W x 21.75"H x 21.25"D	**C/MM217SE/GW/BK** 23.25"W x 21.5"H x 21.25"D	**C/ML217SE/WH/BK** 23.25"W x 21.5"H x 21.25"D	**C/OS217SE/BG** 23.25"W x 21.5"H x 21.25"D	**C/SE217SE/GO** 23.25"W x 21.5"H x 21.25"D	**C/SO217SE/AC** 23.25"W x 24.5"H x 21.25"D		**C/ZU217SE/OB** 23.25"W x 21.5"H x 21.25"D
C/HA236/DB 66"W x 24.5"H x 21.25"D	**C/LA236/BBO** 64.75"W x 21.75"H x 21.25"D	**C/MM236/GW/BK** 64.75"W x 21.5"H x 21.25"D	**C/ML236/WH/BK** 64.75"W x 21.5"H x 21.25"D	**C/OS236/BG** 64.75"W x 21.5"H x 21.25"D	**C/SE236/GO** 64.75"W x 21.5"H x 21.25"D	**C/SO236/AC** 64.75"W x 24.5"H x 21.25"D		**C/ZU236/OB** 64.75"W x 21.5"H x 21.25"D
	C/LA245/BBO 85.5"W x 21.75"H x 21.25"D	**C/MM245/GW/BK** 85.5"W x 21.5"H x 21.25"D	**C/ML245/WH/BK** 85.5"W x 21.5"H x 21.25"D	**C/OS245/BG** 85.5"W x 21.5"H x 21.25"D	**C/SE245/GO** 85.5"W x 21.5"H x 21.25"D	**C/SO245/AC** 85.5"W x 24.5"H x 21.25"D		**C/ZU245/OB** 85.5"W x 21.5"H x 21.25"D
	C/LA329/BBO 44"W x 31.75"H x 21.25"D	**C/MM329/GW/BK** 44"W x 31.25"H x 21.25"D	**C/ML329/WH/BK** 44"W x 31.25"H x 21.25"D	**C/OS329/BG** 44"W x 31.25"H x 21.25"D	**C/SE329/GO** 44"W x 31.25"H x 21.25"D	**C/SO329/AC** 44"W x 33.75"H x 21.25"D	**C/VE329/CA** 45.25"W x 33.25"H x 21.75"D	**C/ZU329/OB** 44"W x 31.25"H x 21.25"D
	C/LA336/BBO 64.75"W x 31.75"H x 21.25"D	**C/MM336/GW/BK** 64.75"W x 31.25"H x 21.25"D	**C/ML336/WH/BK** 64.75"W x 31.25"H x 21.25"D	**C/OS336/BG** 64.75"W x 31.25"H x 21.25"D	**C/SE336/GO** 64.75"W x 31.25"H x 21.25"D	**C/SO336/AC** 64.75"W x 33.75"H x 21.25"D		**C/ZU336/OB** 64.75"W x 31.25"H x 21.25"D
	C/LA339/BBO 64.75"W x 31.75"H x 21.25"D	**C/MM339/GW/BK** 64.75"W x 31.25"H x 21.25"D	**C/ML339/WH/BK** 64.75"W x 31.25"H x 21.25"D	**C/OS339/BG** 64.75"W x 31.25"H x 21.25"D	**C/SE339/GO** 64.75"W x 31.25"H x 21.25"D	**C/SO339/AC** 64.75"W x 33.75"H x 21.25"D	**C/VE339/CA** 66"W x 33.25"H x 21.75"D	**C/ZU339/OB** 64.75"W x 31.25"H x 21.25"D
	C/LA345/BBO 85.5"W x 31.75"H x 21.25"D	**C/MM345/GW/BK** 85.5"W x 31.25"H x 21.25"D	**C/ML345/WH/BK** 85.5"W x 31.25"H x 21.25"D	**C/OS345/BG** 85.5"W x 31.25"H x 21.25"D	**C/SE345/GO** 85.5"W x 31.25"H x 21.25"D	**C/SO345/AC** 85.5"W x 33.75"H x 21.25"D		**C/ZU345/OB** 85.5"W x 31.25"H x 21.25"D
C/HA221CR/DB 45.25"W x 24.5"H x 21.25"D	**C/LA221CR/BBO** 44"W x 21.75"H x 21.25"D	**C/MM221CR/GW/BK** 44"W x 21.5"H x 21.25"D	**C/ML221CR/WH/BK** 44"W x 21.5"H x 21.25"D	**C/OS221CR/BG** 44"W x 21.5"H x 21.25"D	**C/SE221CR/GO** 44"W x 21.5"H x 21.25"D	**C/SO221CR/AC** 44"W x 24.5"H x 21.25"D	**C/VE221CR/CA** 45.25"W x 24"H x 21.75"D	**C/ZU221CR/OB** 44"W x 21.5"H x 21.25"D
	C/LA323CR/BBO 44"W x 31.75"H x 21.25"D	**C/MM323CR/GW/BK** 44"W x 31.25"H x 21.25"D	**C/ML323CR/WH/BK** 44"W x 31.25"H x 21.25"D	**C/OS323CR/BG** 44"W x 31.25"H x 21.25"D	**C/SE323CR/GO** 44"W x 31.25"H x 21.25"D	**C/SO323CR/AC** 44"W x 33.75"H x 21.25"D	**C/VE323CR/CA** 45.25"W x 33.25"H x 21.75"D	**C/ZU323CR/OB** 44"W x 31.25"H x 21.25"D
	C/LA329CR/BBO 44"W x 31.75"H x 21.25"D	**C/MM329CR/GW/BK** 44"W x 31.25"H x 21.25"D	**C/ML329CR/WH/BK** 44"W x 31.25"H x 21.25"D	**C/OS329CR/BG** 44"W x 31.25"H x 21.25"D	**C/SE329CR/GO** 44"W x 31.25"H x 21.25"D	**C/SO329CR/AC** 44"W x 33.75"H x 21.25"D	**C/VE329CR/CA** 45.25"W x 33.25"H x 21.75"D	**C/ZU329CR/OB** 44"W x 31.25"H x 21.25"D
	C/LA317RM/BBO 23.25"W x 31.75"H x 21.25"D	**C/MM317RM/GW/BK** 23.25"W x 31.25"H x 21.25"D	**C/ML317RM/WH/BK** 23.25"W x 31.25"H x 21.25"D	**C/OS317RM/BG** 23.25"W x 31.25"H x 21.25"D	**C/SE317RM/GO** 23.25"W x 31.25"H x 21.25"D	**C/SO317RM/AC** 23.25"W x 33.75"H x 21.25"D		**C/ZU317RM/OB** 23.25"W x 31.25"H x 21.25"D
	C/LA323RM/BBO 44"W x 31.75"H x 21.25"D	**C/MM323RM/GW/BK** 44"W x 31.25"H x 21.25"D	**C/ML323RM/WH/BK** 44"W x 31.25"H x 21.25"D	**C/OS323RM/BG** 44"W x 31.25"H x 21.25"D	**C/SE323RM/GO** 44"W x 31.25"H x 21.25"D	**C/SO323RM/AC** 44"W x 33.75"H x 21.25"D	**C/VE323RM/CA** 45.25"W x 33.25"H x 21.75"D	**C/ZU323RM/OB** 44"W x 31.25"H x 21.25"D
	C/LA517RM/BBO 23.25"W x 51.25"H x 21.25"D	**C/MM517RM/GW/BK** 23.25"W x 50.875"H x 21.25"D	**C/ML517RM/WH/BK** 23.25"W x 50.875"H x 21.25"D	**C/OS517RM/BG** 23.25"W x 50.875"H x 21.25"D	**C/SE517RM/GO** 23.25"W x 50.875"H x 21.25"D	**C/SO517RM/AC** 23.25"W x 53.625"H x 21.25"D		**C/ZU517RM/OB** 23.25"W x 50.875"H x 21.25"D
	C/LA617RM/BBO 23.25"W x 61"H x 21.25"D	**C/MM617RM/GW/BK** 23.25"W x 60.625"H x 21.25"D	**C/ML617RM/WH/BK** 23.25"W x 60.625"H x 21.25"D	**C/OS617RM/BG** 23.25"W x 60.625"H x 21.25"D	**C/SE617RM/GO** 23.25"W x 60.625"H x 21.25"D	**C/SO617RM/AC** 23.25"W x 63.25"H x 21.25"D		**C/ZU617RM/OB** 23.25"W x 60.625"H x 21.25"D

	BERLIN	CHICAGO	DENVER NATURAL OAK	DENVER NATURAL WALNUT	MIAMI
PROJECTOR CABINETS					
Epson LS100	**X/EPS237BL/WE** 64.75"W x 22.79"H x 21.28"D	**X/EPS237CH/BO** 64.75"W x 22.79"H x 21.28"D	**X/EPS237DV/NO** 64.75"W x 22.79"H x 21.28"D	**X/EPS237DV/MW** 64.75"W x 22.79"H x 21.28"D	**X/EPS237MM/GW/BK** 64.75"W x 22.79"H x 21.28"D
Vivitek DH765Z-UST, DW763Z-UST,	**X/VIV237BL/WE** 64.75"W x 21.5"H x 21.28"D	**X/VIV237CH/BO** 64.75"W x 21.5"H x 21.28"D	**X/VIV237DV/NO** 64.75"W x 21.5"H x 21.28"D	**X/VIV237DV/MW** 64.75"W x 21.5"H x 21.28"D	**X/VIV237MM/GW/BK** 64.75"W x 21.5"H x 21.28"D
PROJECTOR CABINETS - SINGLE SPEAKER GRILL					
Epson LS100	**X/EPS236BL/WE** 64.75"W x 22.79"H x 21.28"D	**X/EPS236CH/BO** 64.75"W x 22.79"H x 21.28"D	**X/EPS236DV/NO** 64.75"W x 22.79"H x 21.28"D	**X/EPS236DV/MW** 64.75"W x 22.79"H x 21.28"D	**X/EPS236MM/GW/BK** 64.75"W x 22.79"H x 21.28"D
Hisense 100L8E	**X/HSE245BL/WE** 85.5"W x 21.28"H x 21.28"D	**X/HSE245CH/BO** 85.5"W x 21.28"H x 21.28"D	**X/HSE245DV/NO** 85.5"W x 21.28"H x 21.28"D	**X/HSE245DV/MW** 85.5"W x 21.28"H x 21.28"D	**X/HSE245MM/GW/BK** 85.5"W x 21.28"H x 21.28"D
Hisense 100L10E, 120L10E, 150L10E	**X/HSE10/245BL/WE** 85.5"W x 21.28"H x 21.28"D	**X/HSE10/245CH/BO** 85.5"W x 21.28"H x 21.28"D	**X/HSE10/245DV/NO** 85.5"W x 21.28"H x 21.28"D	**X/HSE10/245DV/MW** 85.5"W x 21.28"H x 21.28"D	**X/HSE10/245MM/GW/BK** 85.5"W x 21.28"H x 21.28"D
LG LGHU85LA		**X/LG1/245BO/BK** 85.5"W x 21.3"H x 21.25"D			**X/LG1/245GW/BK** 85.5"W x 21.3"H x 21.25"D
					X/LG1/229GW/BK 44"W x 21.3"H x 21.25"D
Vivitek DH765Z-UST, DW763Z-UST	**X/VIV236BL/WE** 64.75"W x 21.5"H x 21.28"D	**X/VIV236CH/BO** 64.75"W x 21.5"H x 21.28"D	**X/VIV236DV/NO** 64.75"W x 21.5"H x 21.28"D	**X/VIV236DV/MW** 64.75"W x 21.5"H x 21.28"D	**X/VIV236MM/GW/BK** 64.75"W x 21.5"H x 21.28"D
PROJECTOR CABINETS - DUAL SPEAKER GRILL					
Sony VPLVZ1000ES		**X/SNY245SCH/BO** 85.5"W x 21.5"H x 21.28"D			**X/SNY245MM/GW/BK/BK** 85.5"W x 21.5"H x 21.28"D
LG LGHU85LA		**X/LG1/245S/BO/BK** 85.5"W x 21.3"H x 21.25"D			**X/LG1/245S/GW/BK** 85.5"W x 21.3"H x 21.25"D
					X/LG1/229S/GW/BK 44"W x 21.3"H x 21.25"D

MILAN	OLSO	SIENA	SEATTLE	ZURICH
X/EPS237ML/BK 64.75"W x 22.79"H x 21.28"D	**X/EPS237OS/BG** 64.75"W x 22.79"H x 21.28"D		**X/EPS237SE/GO** 64.75"W x 22.79"H x 21.28"D	**X/EPS237ZU/OB** 64.75"W x 22.79"H x 21.28"D
X/VIV237ML/BK 64.75"W x 21.5"H x 21.28"D	**X/VIV237OS/BG** 64.75"W x 21.5"H x 21.28"D		**X/VIV237SE/GO** 64.75"W x 21.5"H x 21.28"D	**X/VIV237ZU/OB** 44"W x 31.25"H x 21.25"D
X/EPS236ML/BK 64.75"W x 22.79"H x 21.28"D	**X/EPS236OS/BG** 64.75"W x 22.79"H x 21.28"D		**X/EPS236SE/GO** 64.75"W x 22.79"H x 21.28"D	**X/EPS236ZU/OB** 64.75"W x 22.79"H x 21.28"D
X/HSE245ML/BK 85.5"W x 21.28"H x 21.28"D	**X/HSE245OS/BG** 85.5"W x 21.28"H x 21.28"D		**X/HSE245SE/GO** 85.5"W x 21.28"H x 21.28"D	**X/HSE245ZU/OB** 85.5"W x 21.28"H x 21.28"D
X/HSE10/245ML/BK 85.5"W x 21.28"H x 21.28"D	**X/HSE10/245OS/BG** 85.5"W x 21.28"H x 21.28"D		**X/HSE10/245SE/GO** 85.5"W x 21.28"H x 21.28"D	**X/HSE10/245ZU/OB** 85.5"W x 21.28"H x 21.28"D
	X/LG1/245 85.5"W x 21.3"H x 21.25"D			
		X/LG1/229BO/BK 44"W x 21.3"H x 21.25"D		
X/VIV236ML/BK 64.75"W x 21.5"H x 21.28"D	**X/VIV236OS/BG** 64.75"W x 21.5"H x 21.28"D		**X/VIV236SE/GO** 85.5"W x 21.5"H x 21.28"D	**X/VIV236ZU/OB** 64.75"W x 21.5"H x 21.28"D
	X/SNY245OS/BG 85.5"W x 21.5"H x 21.28"D			
	X/LG/245S 85.5"W x 21.3"H x 21.25"D			
		X/LG1/229S/BO/BK 44"W x 21.3"H x 21.25"D		