REVISIONS			
REV.	DESCRIPTION	DATE	APPROVED

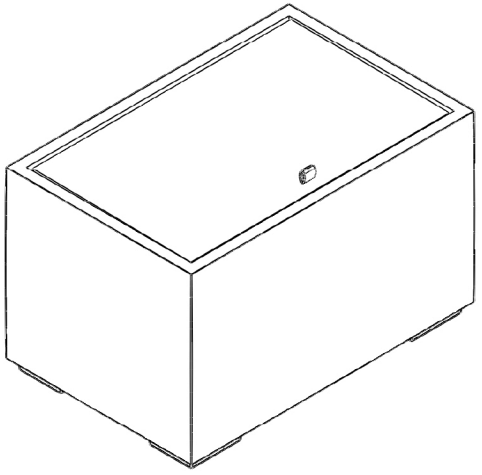

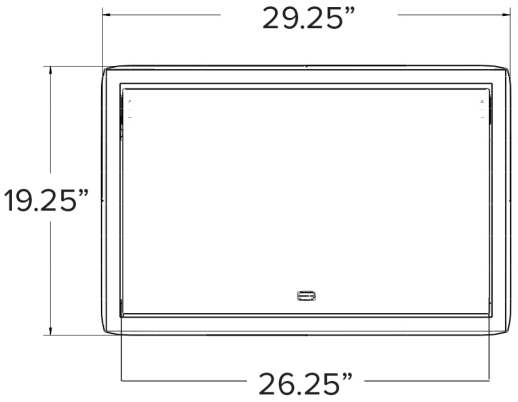

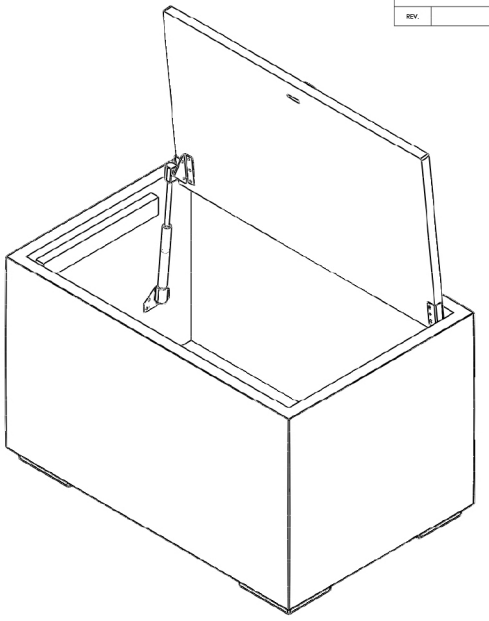

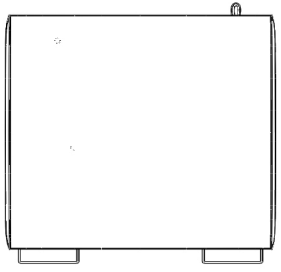

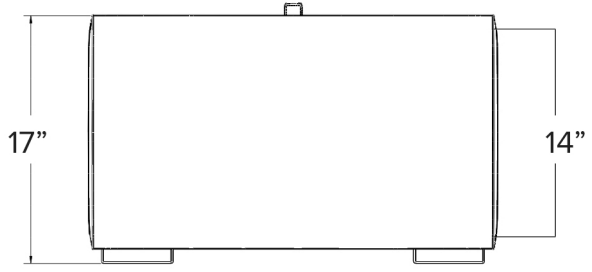

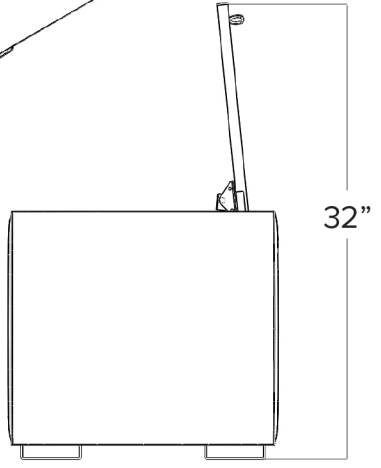

Interior Storage Measures:
26.25”W x 14”H x 16.375”D

UNLESS OTHERWISE SPECIFIED:
- ALL THREADS TO BE CLASS 3
- DEBURR ALL PARTS TO 0.005 RADIUS
- CONSIDER ROUND AND BREAK SHARP EDGES
- STAMP, ETCH, OR MARK DRAWING NUMBER AND REVISION LETTER ON A NON-CRITICAL SURFACE.
- SURFACE FINISH TO BE 63 RMS
- TOLERANCES: X ± 1; XX ± .01; XXX ± .005; XXXX ± .0005; X° ± 1°; X.° ± .5°

CAD Solidworks

3rd ANGLE PROJECTION

QTY	NEXT ASSEMBLY
	APPLICATION

PROPRIETARY INFORMATION: THIS MATERIAL AND THE CONTENTS THEREOF ARE CONSIDERED THE PROPERTY OF SALAMANDER DESIGNS, AND THE DISCLOSURE TO UNAUTHORIZED INDIVIDUALS OR DISSEMINATION, PUBLICATION, OR REPRODUCTION IN WHOLE OR IN PART, WITHOUT WRITTEN CONSENT BY **SALAMANDER DESIGNS** OF BLOOMFIELD, CONNECTICUT.

Applicable Standards/Specifications per: ANSI/ASME Y14.5M-1994

SALAMANDER DESIGNS
811 BLUE HILLS AVE.
BLOOMFIELD, CT 06002
/T/ 860.313.0525 /F/ 860.313.0526

SIZE: D

TITLE: END TABLE

MATERIAL			SURFACE TREATMENT
DRAWN BY: R.FANTOLI	DATE: 5-21-08		HEAT TREATMENT
ENGINEER	CHECKED BY	SCALE: 1:4	SHEET: 1 OF 1
DO NOT SCALE DRAWING	DRAWING NUMBER: ET1/_		REV